BYT11

Magnetic guide tube for cartridge valve

- Pull type, four section argon arc copper pile welding, external hexagonal thread connection

BYT11-13-01

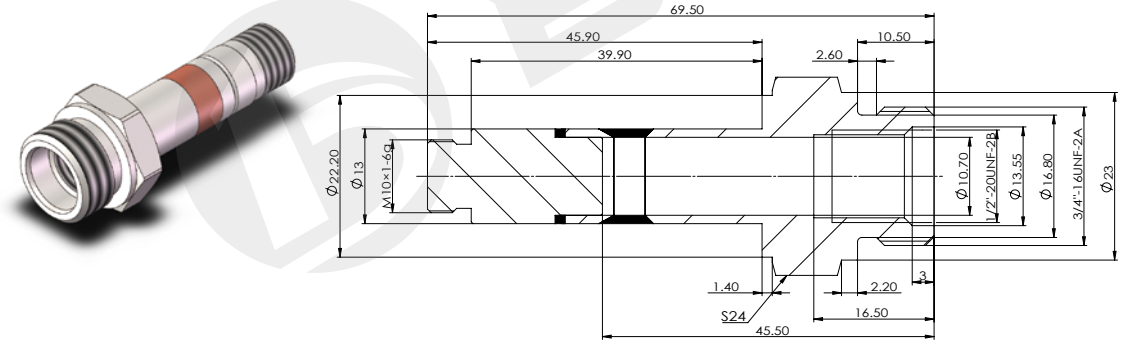

technical parameter					
Working oil pressure	MPa	⩽ 21	Hexagon size	mm	24

BYT11-13-04M

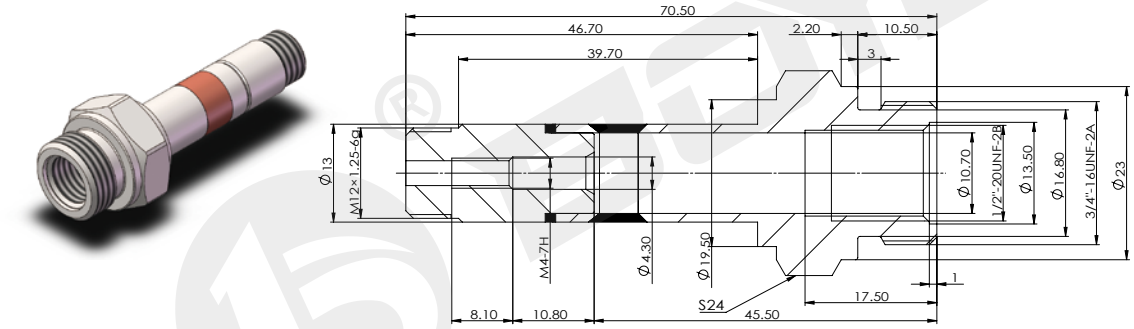

technical parameter					
Working oil pressure	MPa	⩽ 21	Hexagon size	mm	24

The sample data comes from the laboratory environment and is only for reference. If your company needs the latest data or has special needs, please contact Boye hydraulic engineer.